Century Bathworks, Inc.

Measuring Guide

Please Fax to: 973-785-0777

- Measure the exact Finished Opening, Century will provide deductions.
- Note if walls or sill dimensions vary.
- Use Centerline Dimension for all enclosures.

Customer _____ Phone _____ Date _____

Sales Person _____ Purchase Order _____

Corner Tub Enclosure

Circle Series & Model Series: Glasstec, Brassline, Centec , Lucette, Crest.
Model: 636 636-B (Buttress)

Finish _____

Glass _____

Special Instructions _____

_____

_____

List Price _____

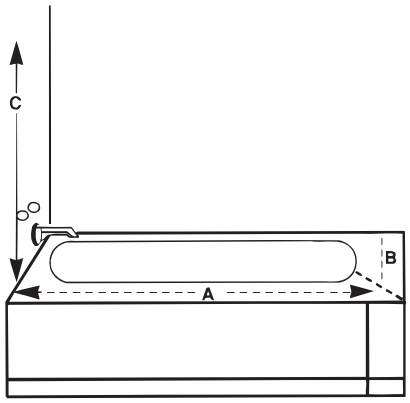

A ☐
B ☐
C ☐

Shower Head: Left ☐ Right ☐

Unit as shown ☐ Reverse ☐

Base: Level, Out of Level

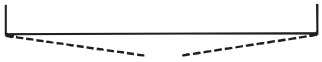

Walls: Plumb

Buttress

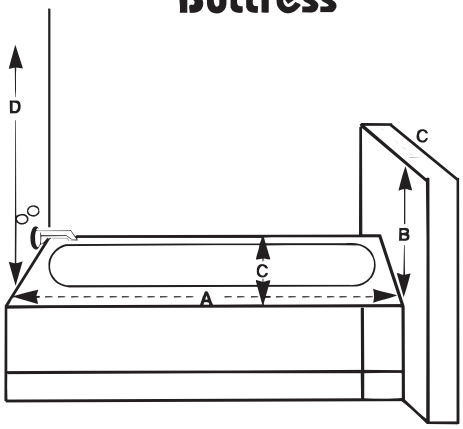

Finish _____

Glass _____

Special Instructions _____

_____

_____

List Price _____

A ☐
Buttress Height B ☐
Return Panel C ☐
D ☐

Shower Head: Left ☐ Right ☐

Unit as shown ☐ Reverse ☐

Base: Level, Out of Level

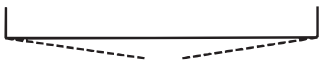

Walls: Plumb